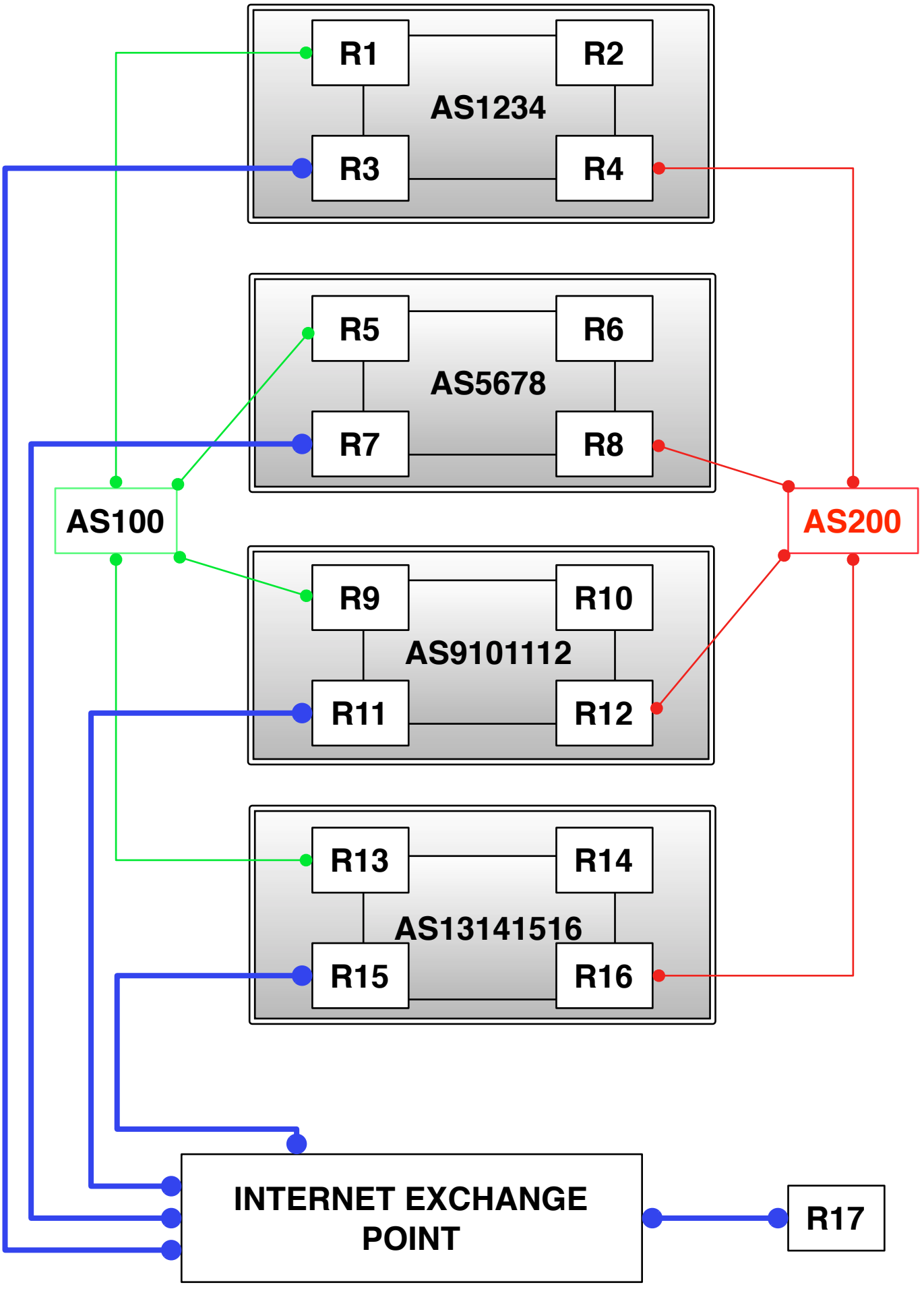
R1
R2
AS1234
R3
R4
R5
R6
AS5678
R7
R8
AS100
AS200
R9
R10
AS9101112
R11
R12
R13
R14
AS13141516
R15
R16
INTERNET EXCHANGE POINT
R17